ION TRACK

IP20

NM/MM

6 WARRANTY

KG 1.5

230v

1W

DALI

EN 60598-1

EN60598-2-22

EN55015

EN61547

EN61000-3-2



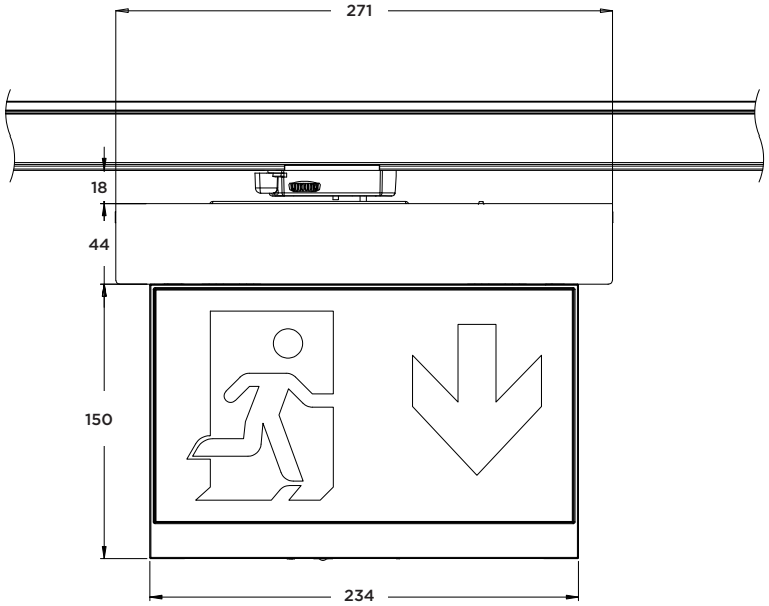

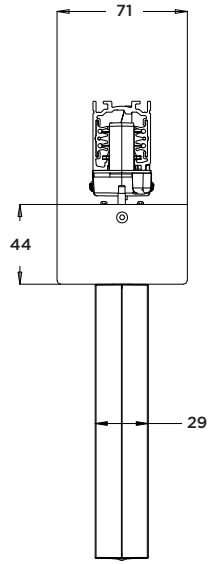

ION TRACK

IP20 | NM/MM | 6 WARRANTY | KG 1.5 | 230v | 1W | DALI

EN 60598-1
EN60598-2-22
EN55015
EN61547
EN61000-3-2

EXAMPLE PRODUCT CODE		ION	T	LM	W	IS	S	U
FAMILY	ION	ION						
TYPE	TRACK	T						
CONTROL	MAINS/CENTRAL BATTERY*	LA						
	DALI MAINS/CENTRAL BATTERY*	DA						
	MAINTAINED SELF-CONTAINED	LM						
	MAINTAINED DALI	DL						
	MAINTAINED SPECTO-XT	XT						
COLOUR	WHITE (RAL 9016)	W						
	BLACK (RAL9005)	K						
	GREY (RAL 9006)	G						
	PENNY BRONZE	V						
LEGEND TYPE	ISO 7010	IS						
LEGEND SIDE	SINGLE SIDED	S						
	DOUBLE SIDED	D						
ARROW DIRECTION	UP	U						
	DOWN	D						
	LEFT	L						
	RIGHT	R						

Example Code IONTLMWISSU ION | Track | Maintained Self-Contained | White (RAL 9016) | ISO 7010 | Single SIded | Up Arrow

For more information on colours, please go to the **Finishes Page**.

*For input voltages please refer to our installation leaflets.